ECEN 361
Lecture 5 – Standard Interfaces

PotD: Golden Handcuffs

Serial Communication to/from µC

- Electrical Single-Ended vs Differential
- Asynchronous vs Synchronous
- Three Digital Serial Protocols Avail on STM32
  - SPI
  - I2C
  - UART (IRdA)

BRIGHAM YOUNG UNIVERSITY IDAHO

Single-Ended vs. Differential

- Real world has noise
- Differential is more immune
- Differential can cancel ”common-mode” noise

Need Special I/O Pads “Transceivers”

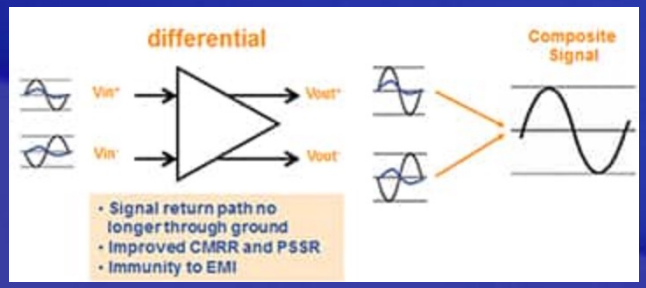

MSP432: All Single-Ended

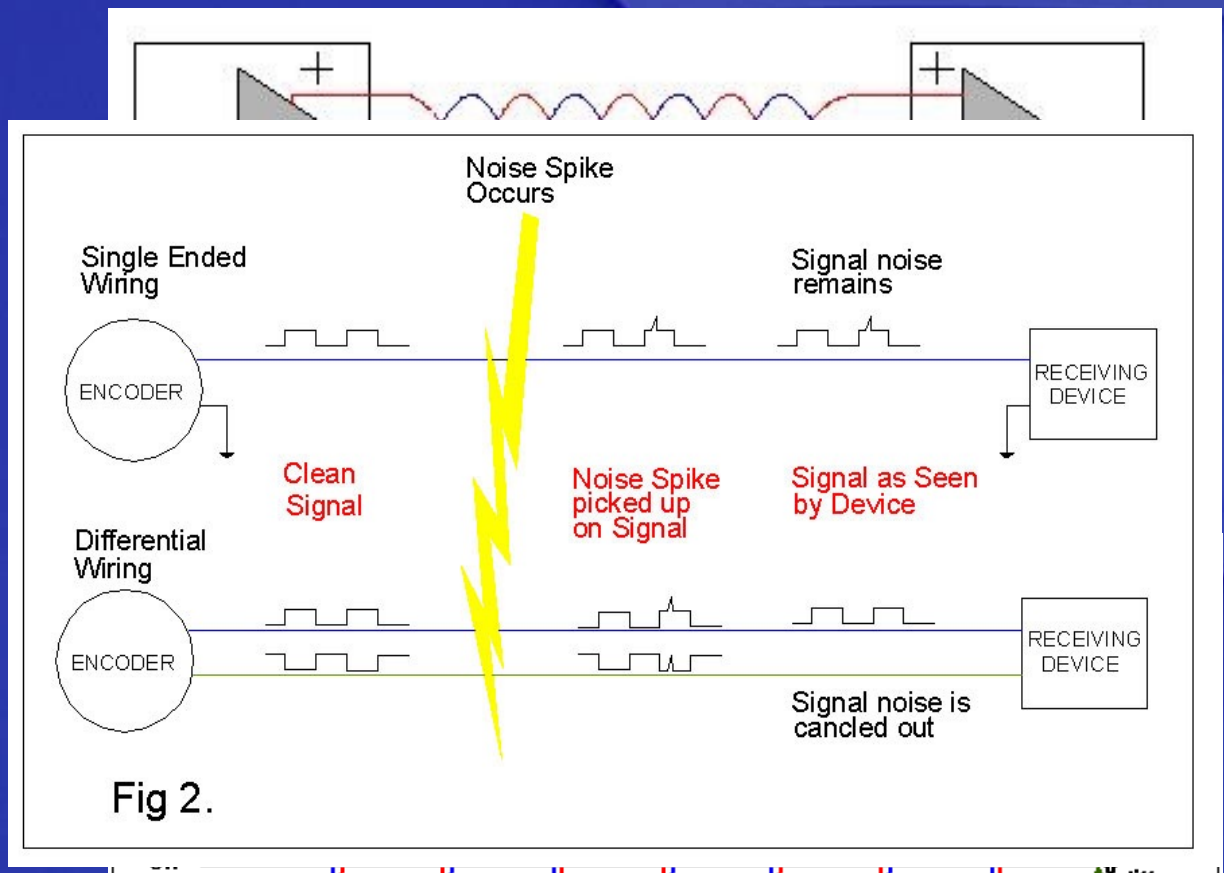

Fig 2.

BRIGHAM YOUNG UNIVERSITY IDAHO

Async vs. Sync

On the STM32:

- Synchronous:
  - SPI (4 channels master)
  - 24 Sensing (slave)
  - I^2C (3 channels)

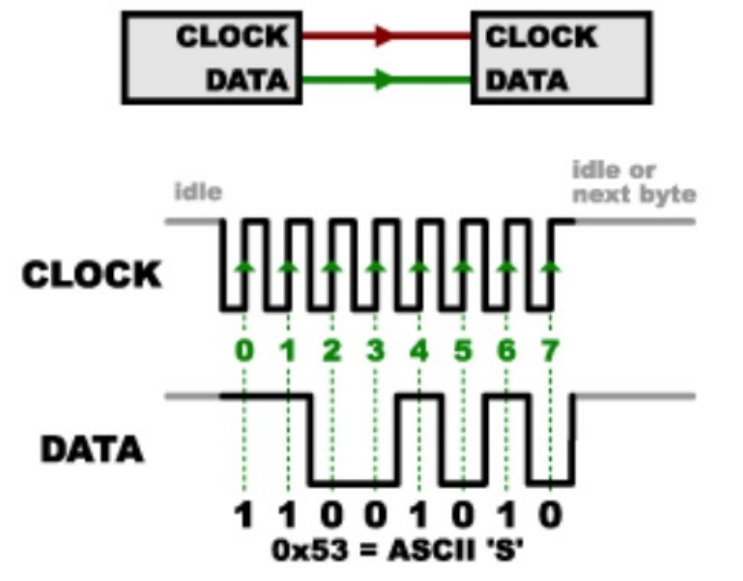

- Asynchronous:
  - UART (one + IrDA)

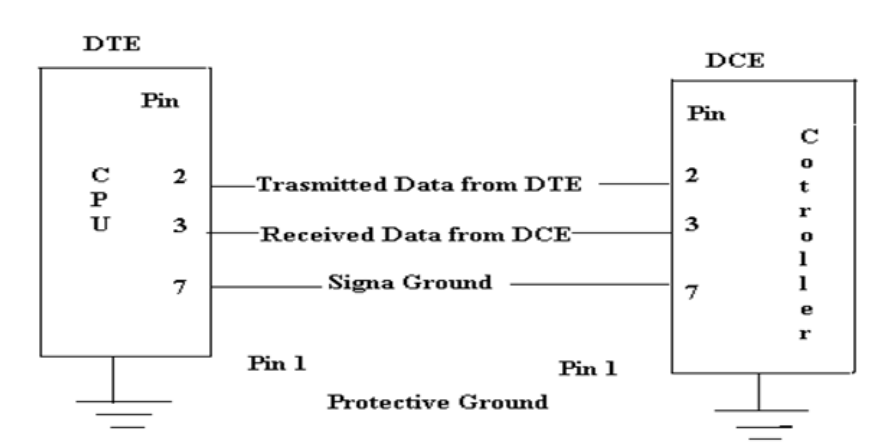

BRIGHAM YOUNG UNIVERSITY IDAHO

SPI with Multiple Slaves

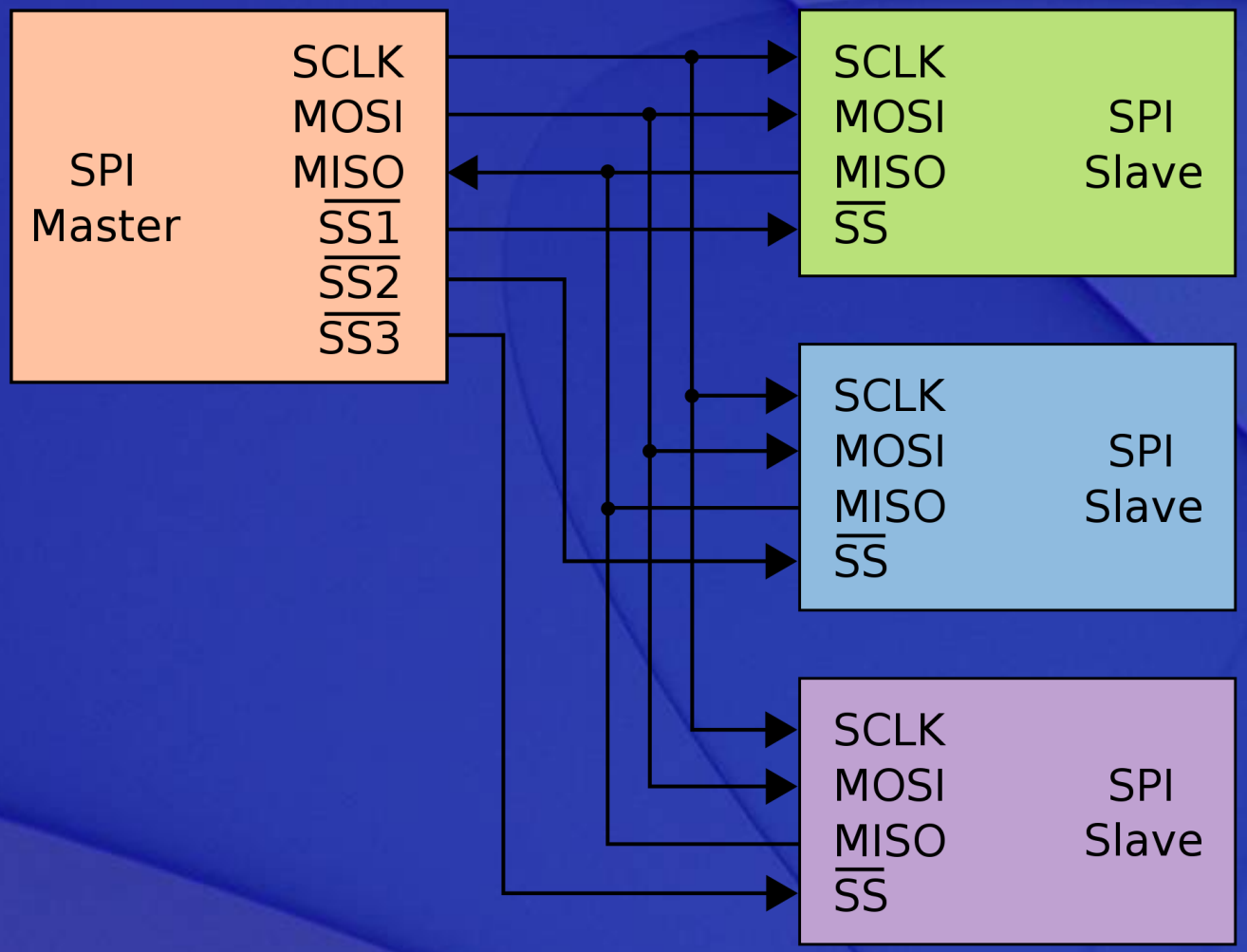

BRIGHAM YOUNG
UNIVERSITY
IDAHO

SPI Tutorial

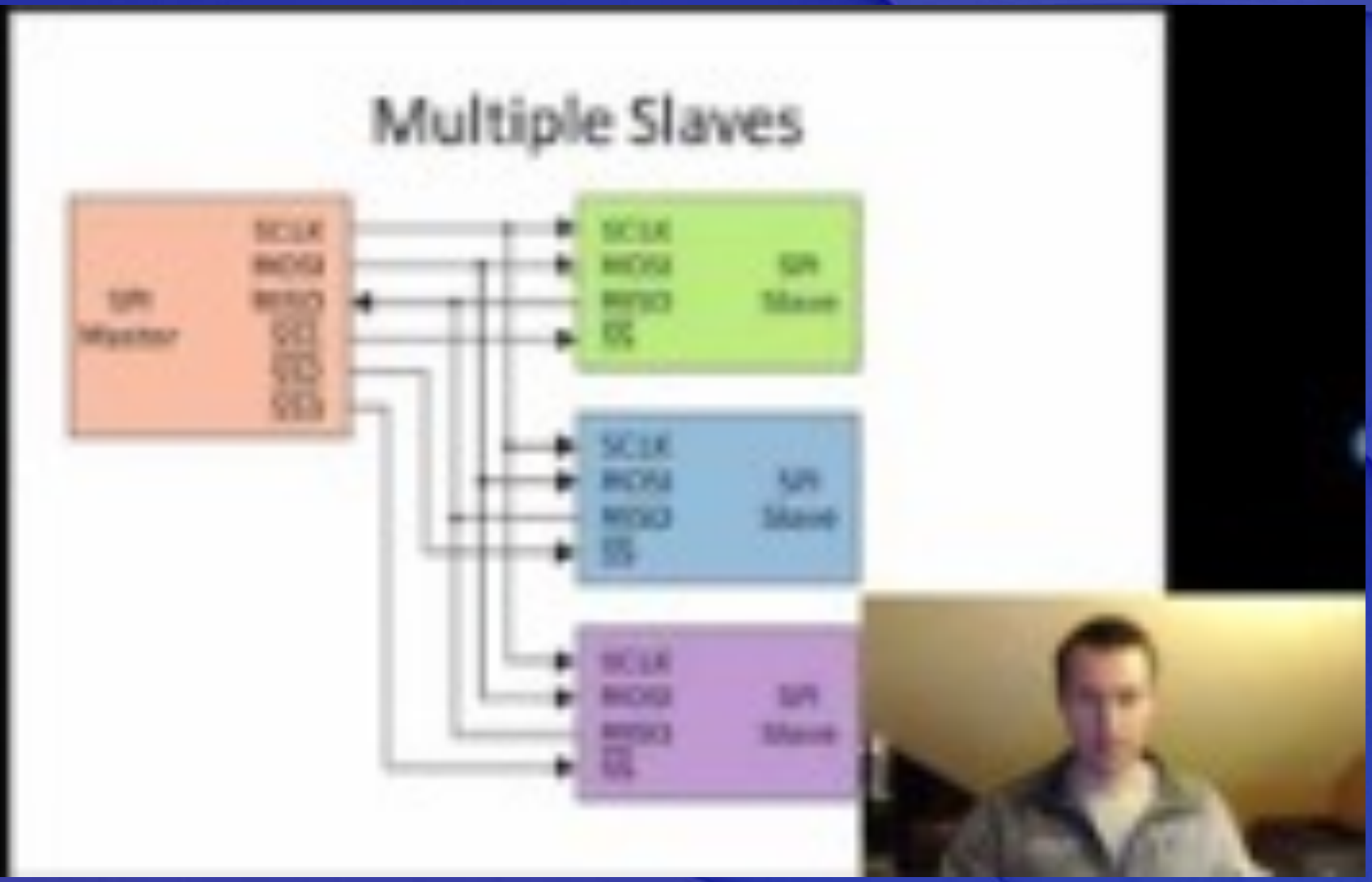

Serial Peripheral Interface (SPI)

- Synchronous Communication Protocol
  - 3-Wire (Plus 1 Chip-Select Pin/Device)
  - Hardware On Microcontroller
- Developed By Motorola
  - “Loose” Standard
- Broad Range of Devices Supported
  - Memory (i.e. EEPROM, RAM, Etc.)
  - Sensors

SPI Characteristics

- 3 Wires (Plus Chip Select Pin/Device)
  - Master Out Slave In (MOSI)
  - Master In Slave Out (MISO)
  - Master/Slave Clock Output/Input (SCK)
  - Chip/Slave Select (SS)
- Multiple Devices Connected On Bus
  - Limited Only By Number Of uC Pins
- Supports Various Data Transfer Rates

BRIGHAM YOUNG UNIVERSITY IDAHO

I2C Tutorial

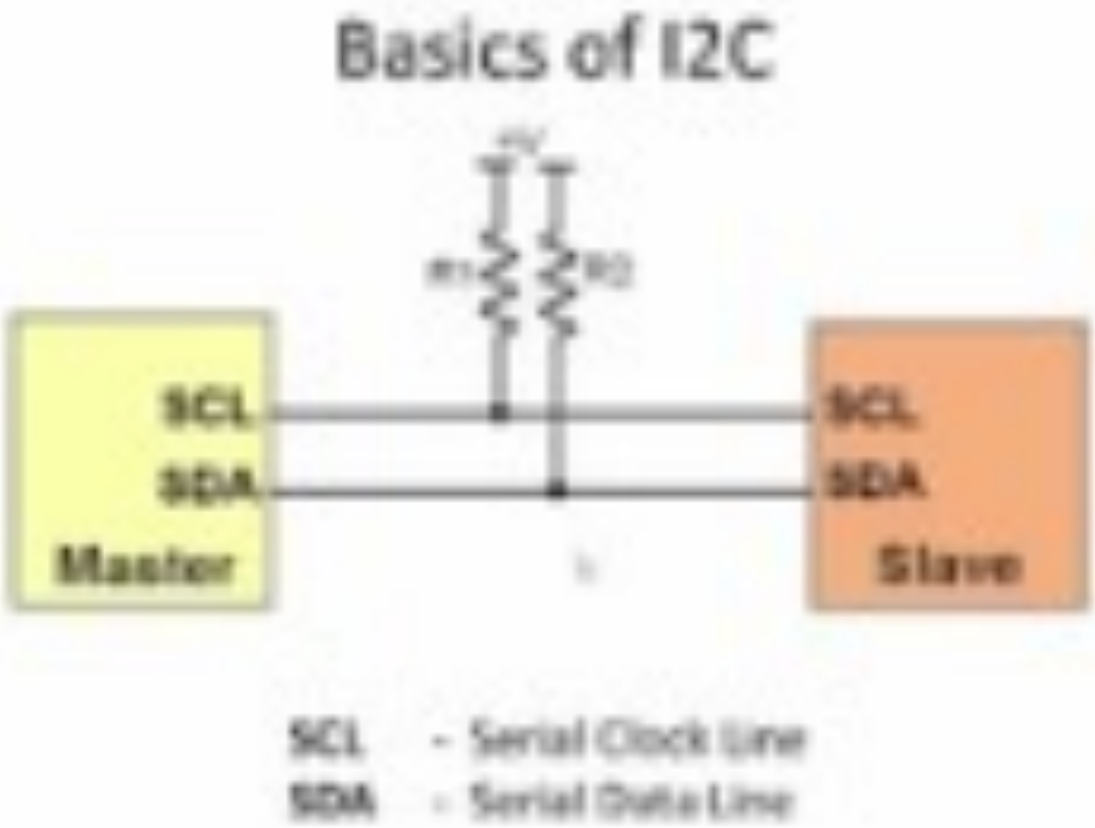

Inter-Integrated Circuit (I^2C)

- 2-Wire Serial Communication Bus
- Introduced By Philips In 1992
- Communication Protocol Between Microcontroller And Peripherals
  - Real Time Clocks (RTCs)
  - Analog to Digital Converters (ADCs)
  - Various Sensors
  - Many, many, more

I^2C Characteristics

- Only 2 Wires Needed On Bus
  - Serial Data (SDA)
  - Serial Clock (SCL)
- Multiple Devices Connected On Bus
  - Typically Limited (i.e. 8, 20, 2^7, 2^{10},…?)
- Similar Code For All I^2C Peripherals
- Supports Various Data Transfer Rates

BRIGHAM YOUNG UNIVERSITY IDAHO

I²C Multiple Devices

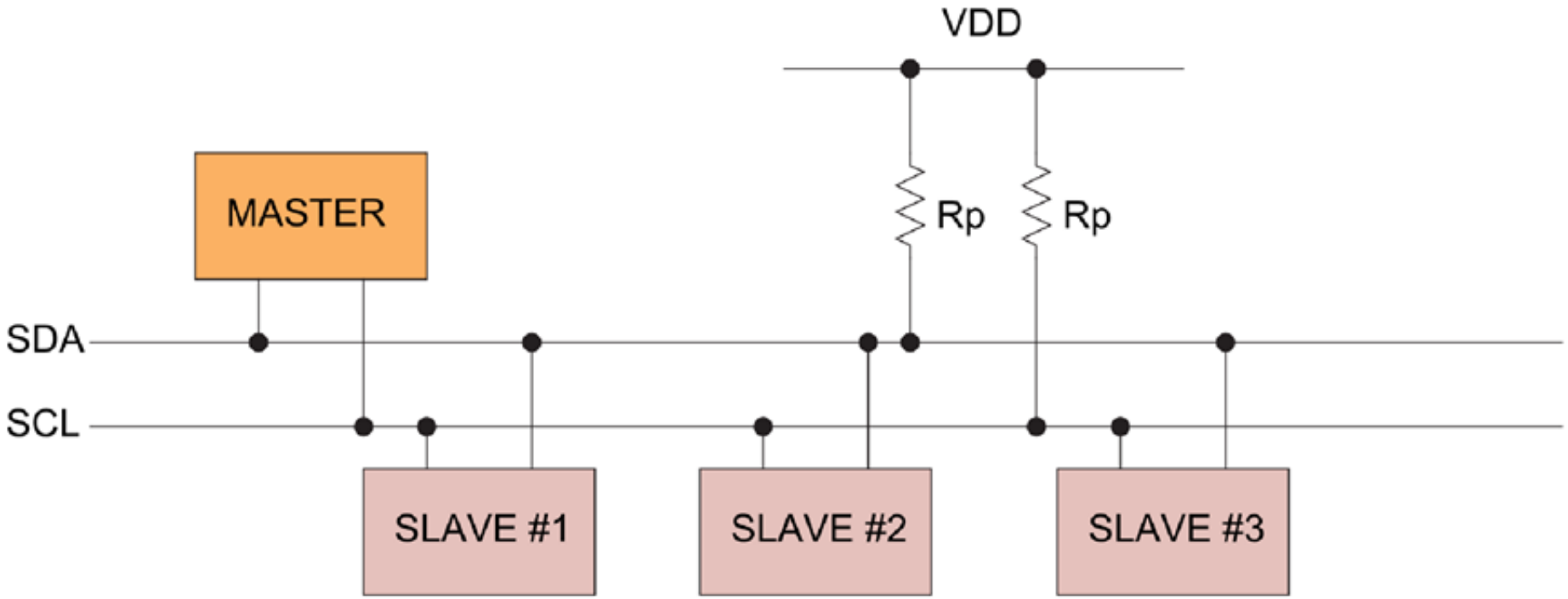

BRIGHAM YOUNG UNIVERSITY IDAHO

I2C Data Frame

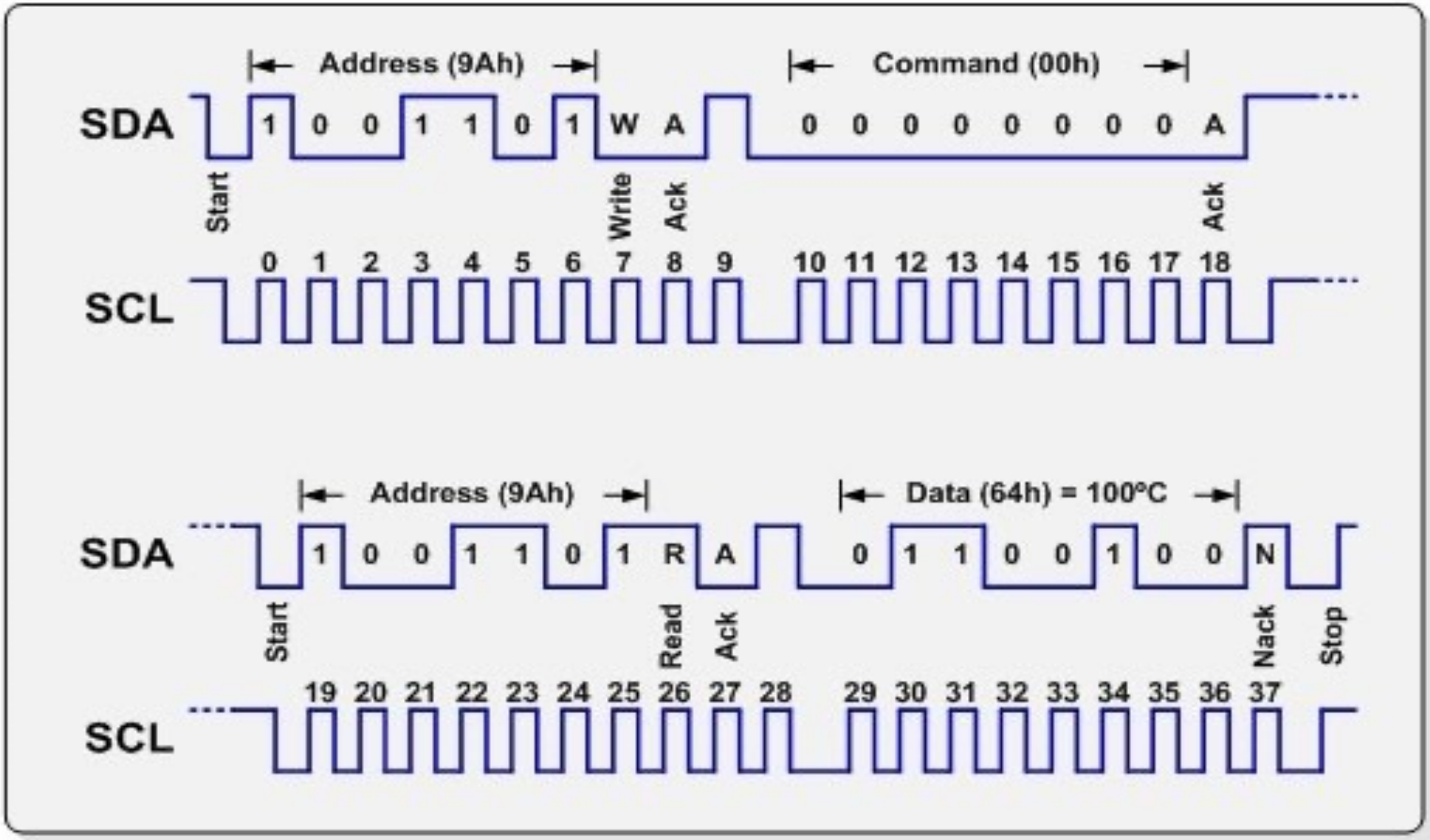

BRIGHAM YOUNG UNIVERSITY IDAHO

The Sync I/F's: SPI vs I2C

I2C

- Only 2 Wires Needed On Bus
  - Serial Data (SDA)
  - Serial Clock (SCL)

Multiple Devices Connected On Bus

- Typically Limited (i.e. 8, 20, 2^7, 2^{10},...?)

- Supports Various Data Transfer Rates
- Phys. Max Speed: ~3Mbit
  -- bus dependent

SPI

- 3 Wires (Plus Chip Select Pin/Device)
  - Master Out Slave In (MOSI)
  - Master In Slave Out (MISO)
  - Master/Slave Clock Output/Input (SCK)
  - Chip/Slave Select (SS)
- Multiple Devices Connected On Bus
  - Limited Only By Number Of uC Pins
- Supports Various Data Transfer Rates
- Phys. Max Speed > 50Mbit
  -- not bus dependent

BRIGHAM YOUNG UNIVERSITY IDAHO

Async : UART Tutorial

BRIGHAM YOUNG UNIVERSITY IDAHO

UART Transmission

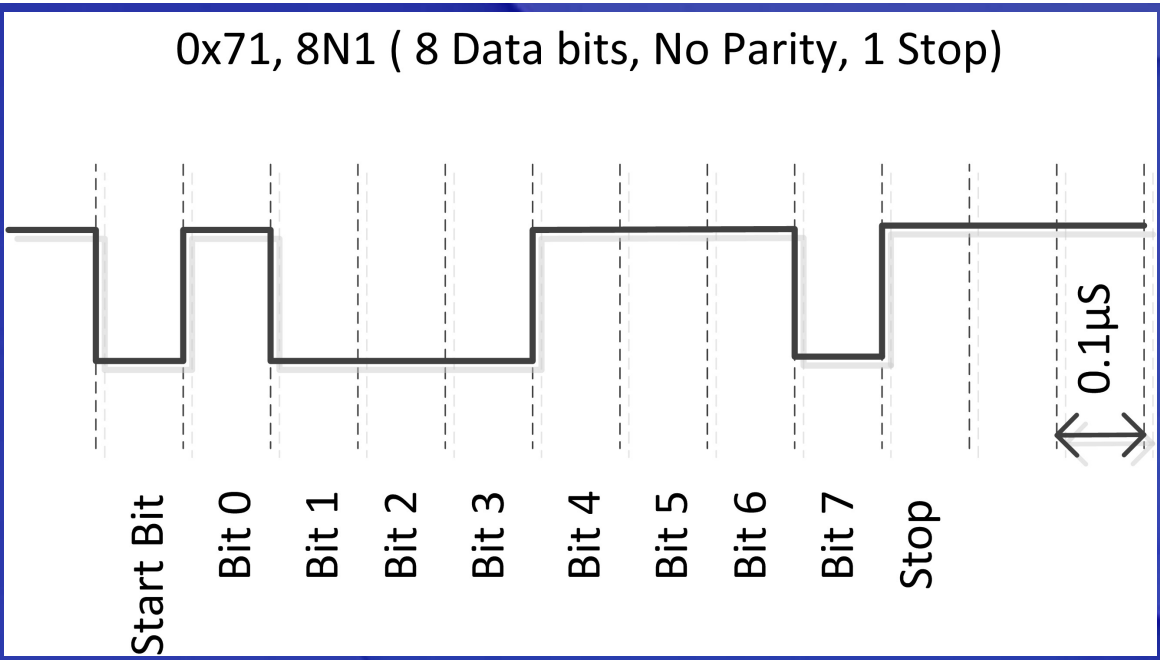

BRIGHAM YOUNG UNIVERSITY IDAHO

UART Block Diagram

Figure 9.1 Block diagram of the UART mode.

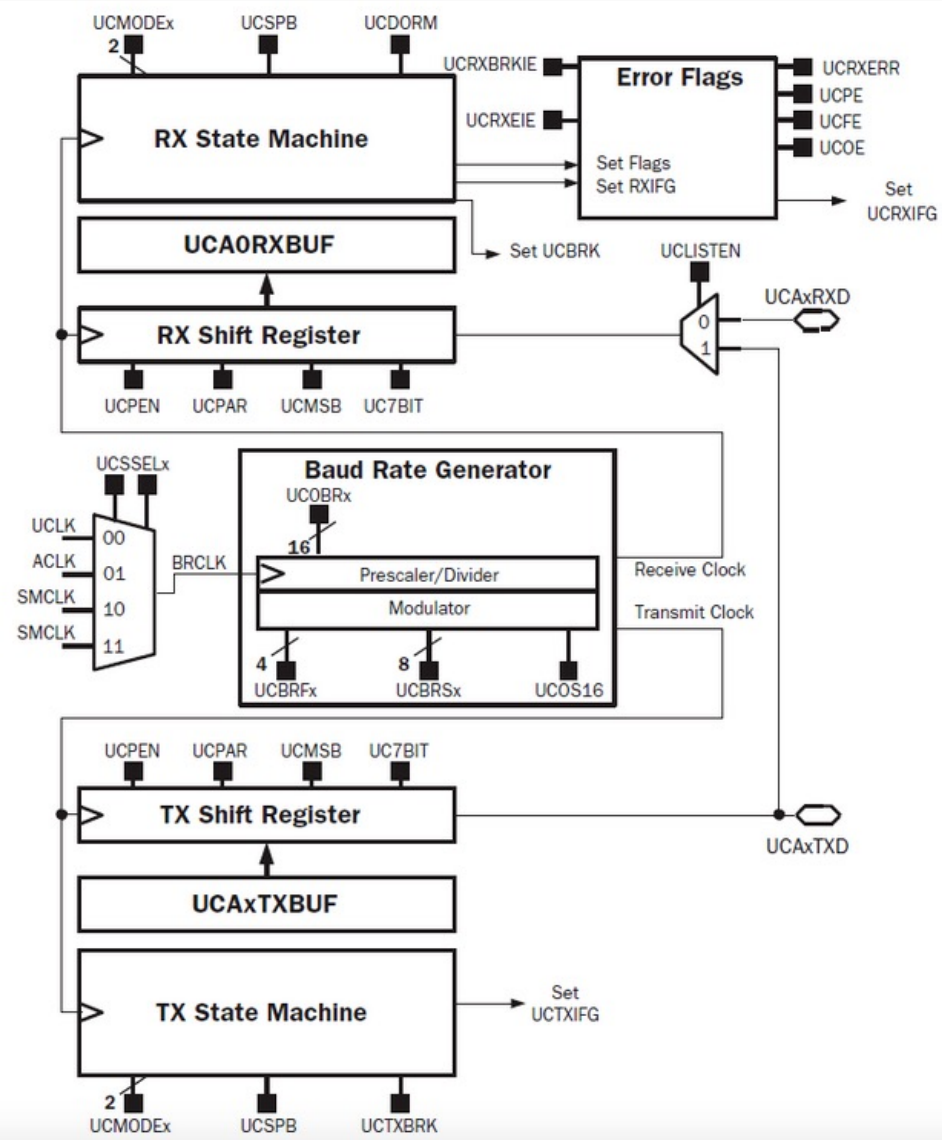

BRIGHAM YOUNG UNIVERSITY IDAHO

Wireless → Separate Chip "Module"

- Often, communication is via:

  SPI or I2C or UART

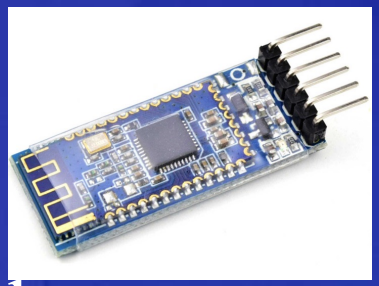

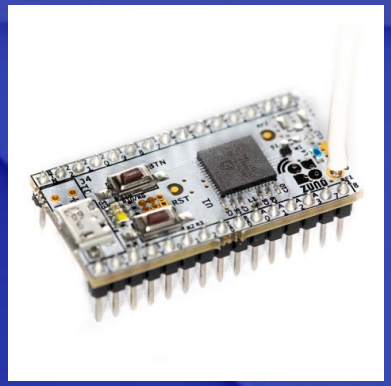

- A Point-to-Point communication Technology
- Normally works in an unlicensed band
- Requires some sort of configuration
- "Smart"

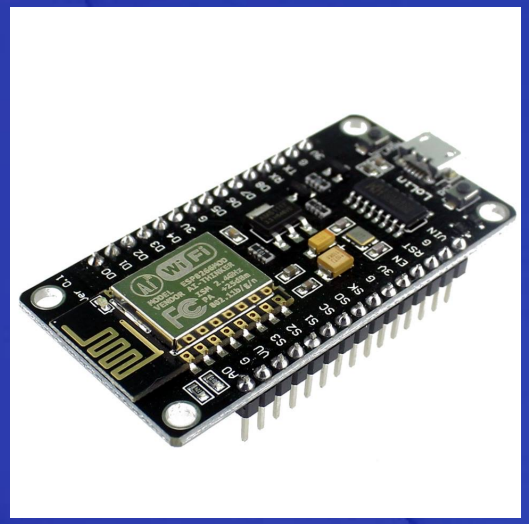

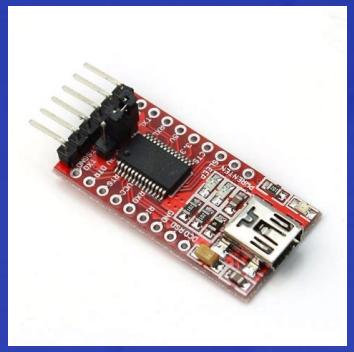

BRIGHAM YOUNG UNIVERSITY IDAHO

Simple RF

NRF24L01 Transceiver Module

Let's take a closer look at the NRF24L01 transceiver module. It uses the 2.4 GHz band and it can operate with baud rates from 250 kbps up to 2 Mbps. If used in open space and with lower baud rate its range can reach up to 100 meters.

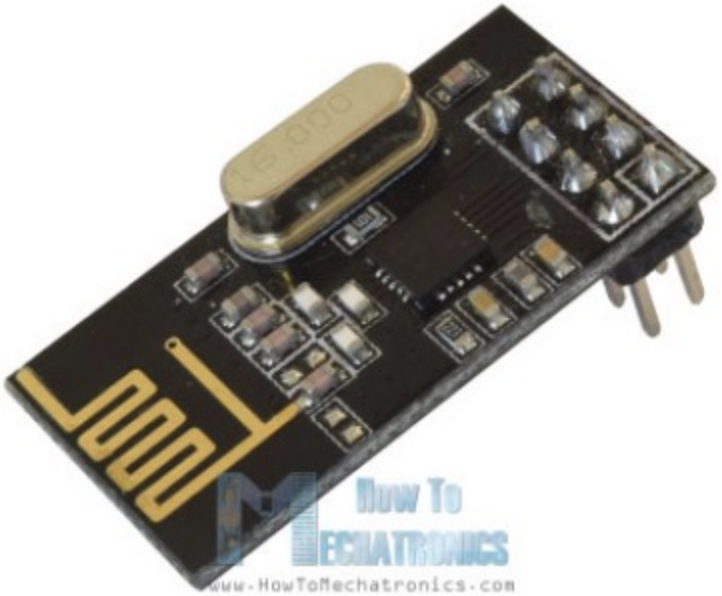

BRIGHAM YOUNG UNIVERSITY IDAHO

Simple RF

BRIGHAM YOUNG UNIVERSITY IDAHO

Simple RF

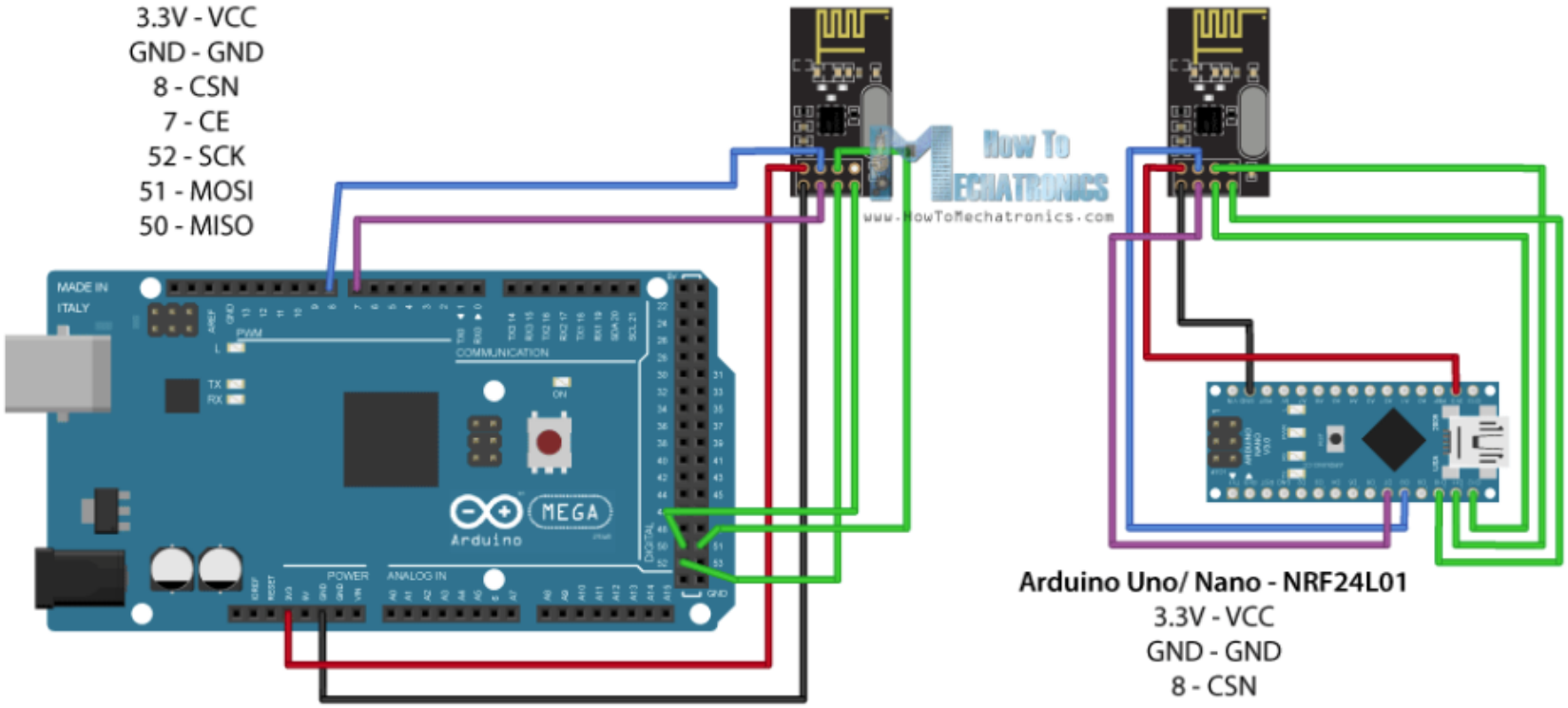

Bluetooth

- Short range communication in the 2.4 GHz band
- Initially designed as a cable replacement technology – Connecting keyboards, mice, speakers.
- Set up mostly in a single master, many slave configuration.

BRIGHAM YOUNG
UNIVERSITY
IDAHO

Bluetooth

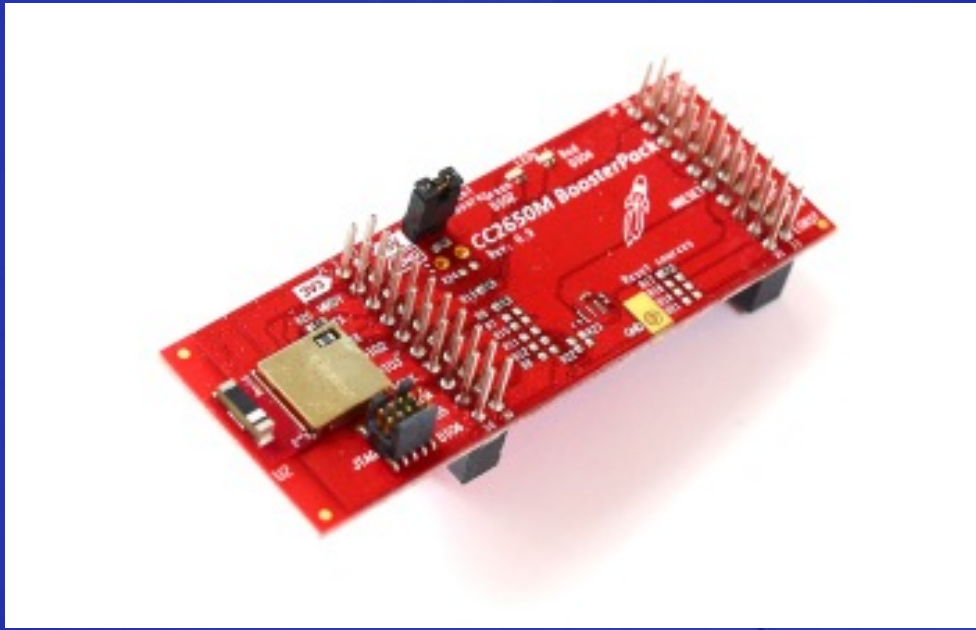

WIFI - What is IEEE 802.11?

- Standard for wireless local area networks (wireless LANs) developed in 1990 by IEEE
- Intended for home or office use (primarily indoor)
- 802.11 standard describes the MAC layer, while other substandards (802.11a, 802.11b) describe the physical layer
- Wireless version of the Ethernet (802.3) standard

Wifi

- Short range communication in the 2.4/5.8 GHz band
- Designed to replace LAN cables
- Set up in mostly a peer network – however one of the devices has to provide the IP addresses (DHCP). This is the access point.

BRIGHAM YOUNG
UNIVERSITY
IDAHO

Wifi

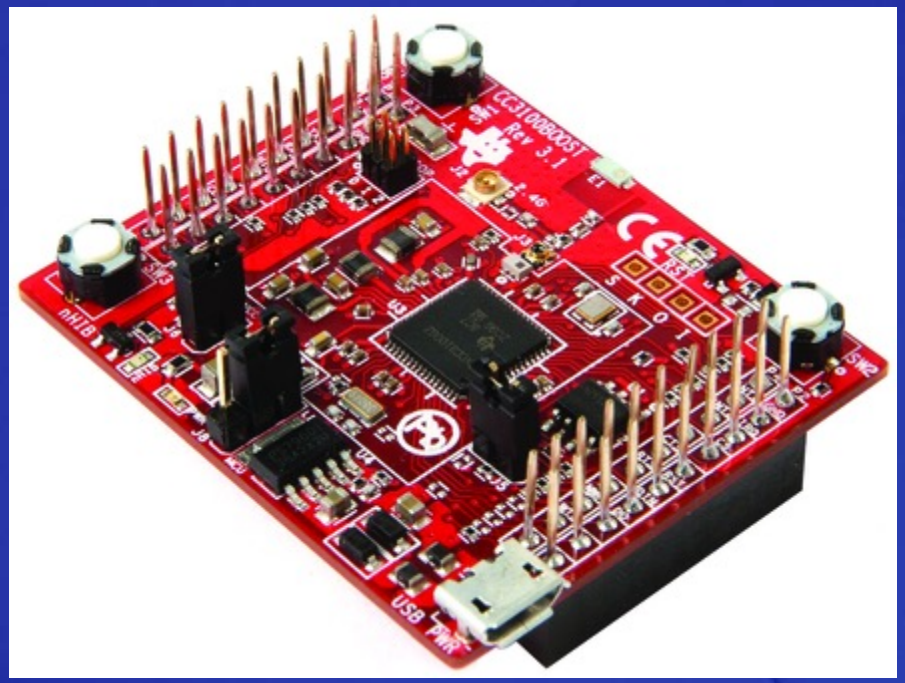

Wifi

Range of Wifi

- Standard Range – 30 meters
- Range with Antenna
  Several hundreds of meters

What is Zigbee?

- Based on IEEE 802.15.4 Standard
- Designed for sensor and control networks
- Used for applications that require:
  - Low Power Consumption
  - Low Data Rate
  - Network Security

BRIGHAM YOUNG UNIVERSITY IDAHO

Zigbee Layers

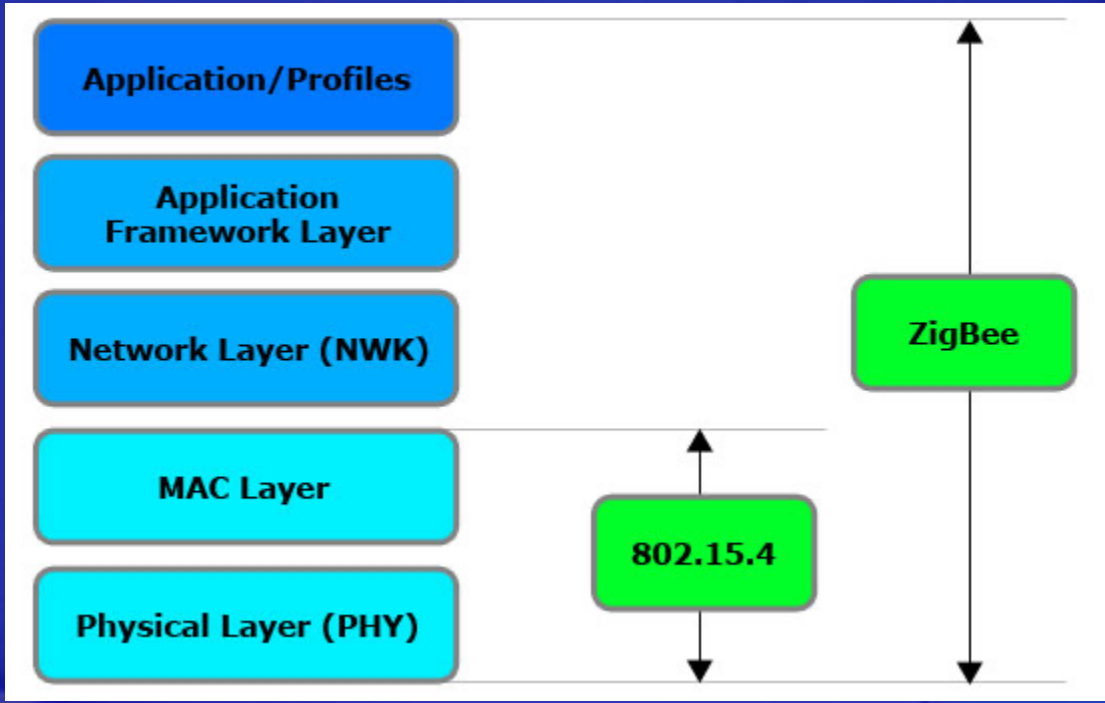

BRIGHAM YOUNG UNIVERSITY IDAHO

A Zigbee Network

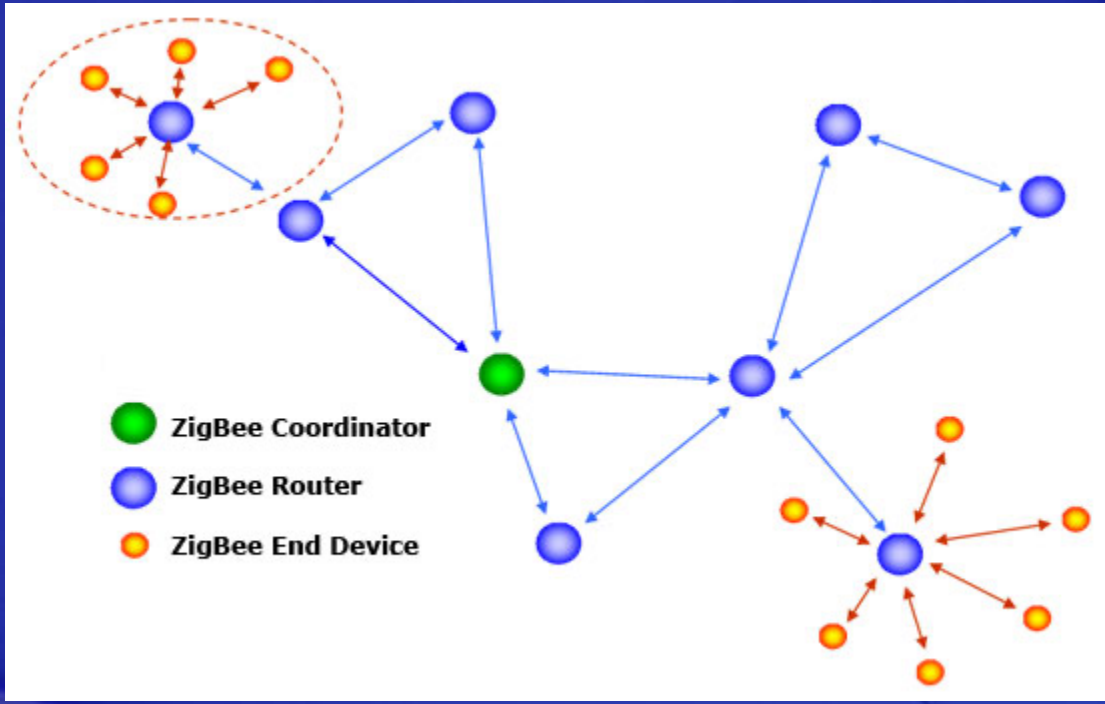

BRIGHAM YOUNG UNIVERSITY IDAHO

Xbee Wireless Modules

- Features/Benefits
- www.digi.com
- 802.15.4/Multipoint network topologies
- 2.4 GHz for worldwide deployment
- 900 MHz for long-range deployment
- Low-power sleep modes
- Multiple antenna options
- Low power and long range variants available

BRIGHAM YOUNG
UNIVERSITY
IDAHO

Xbee Wireless Modules

BRIGHAM YOUNG
UNIVERSITY
IDAHO

Cellular Connection

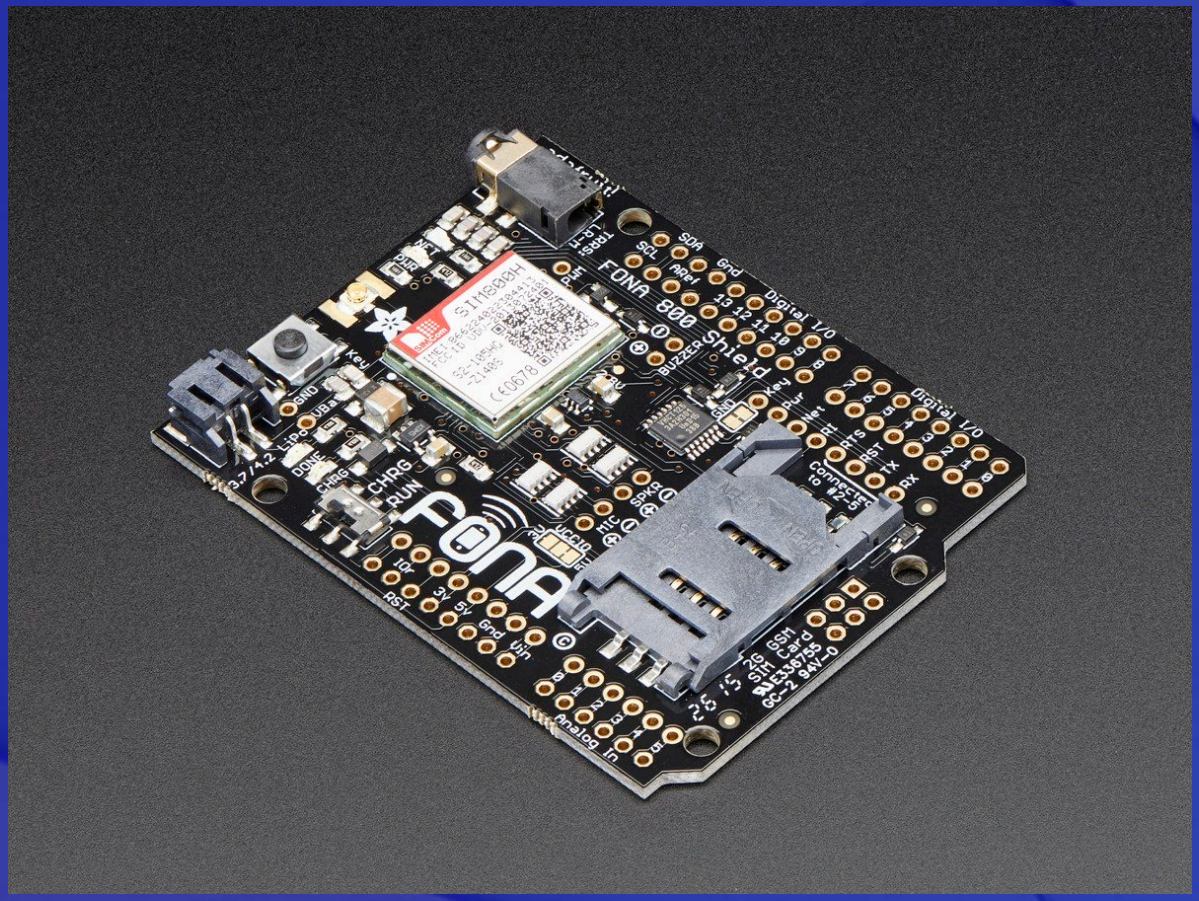

BRIGHAM YOUNG UNIVERSITY IDAHO

Cellular Connection

- The Arduino GSM Shield connects our Arduino to the network. Plug in a SIM card from an operator offering GPRS coverage and also you can also make/receive voice calls and send/receive SMS messages.

- Quad-band GSM/GPRS modem that works at frequencies GSM850MHz, GSM900MHz, DCS1800MHz and PCS1900MHz

BRIGHAM YOUNG UNIVERSITY IDAHO

The Various Protocols

Market Name	ZigBee™	---	Wi-Fi™	Bluetooth™
Standard	802.15.4	GSM/GPRS CDMA/1xRTT	802.11b	802.15.1
Application Focus	Monitoring & Control	Wide Area Voice & Data	Web, Email, Video	Cable Replacement
System Resources	4KB - 32KB	16MB+	1MB+	250KB+
Battery Life (days)	100 - 1,000+	1-7	.5 - 5	1 - 7
Network Size	Unlimited (2^{64})	1	32	7
Bandwidth (KB/s)	20 - 250	64 - 128+	11,000+	720
Transmission Range (meters)	1 - 100+	1,000+	1 - 100	1 - 10+
Success Metrics	Reliability, Power, Cost	Reach, Quality	Speed, Flexibility	Cost, Convenience